PRODUCT EVALUATION

(Florida Product Approval)

DYME METALS Association

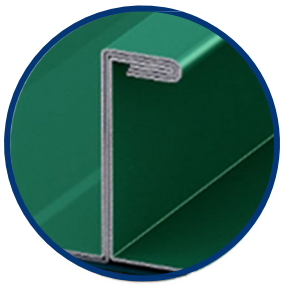

DM Class 2000

FL# 47604.20-R1
2" Mechanical Seam (18" Wide)

24ga and 22ga Galvalume
Approved

Approved for installation **inside** and **outside** of the **HVHZ** (Miami-Dade & Broward counties).

Panel Material
24ga Galvalume (min) *Corrosion resistant per FBC 1507.4.3 (non-HVHZ) or 1518.9 (HVHZ.)*

Panel Description
Non-Structural steel roof panel with 2" tall rib (nominal) and 18" (max) coverage.

Deck/Substrate
15/32" (min) 4-ply CDX plywood or ¾" (min) thick wood plank *(min S.G. of 0.42).* nailed to 2x rafters spaced 24" O.C. with 8d ring-shank nails spaced 6" (max) O.C.

Available Options
22ga galvalume also available and acceptable.
16", 14", and 12" widths also available and acceptable.

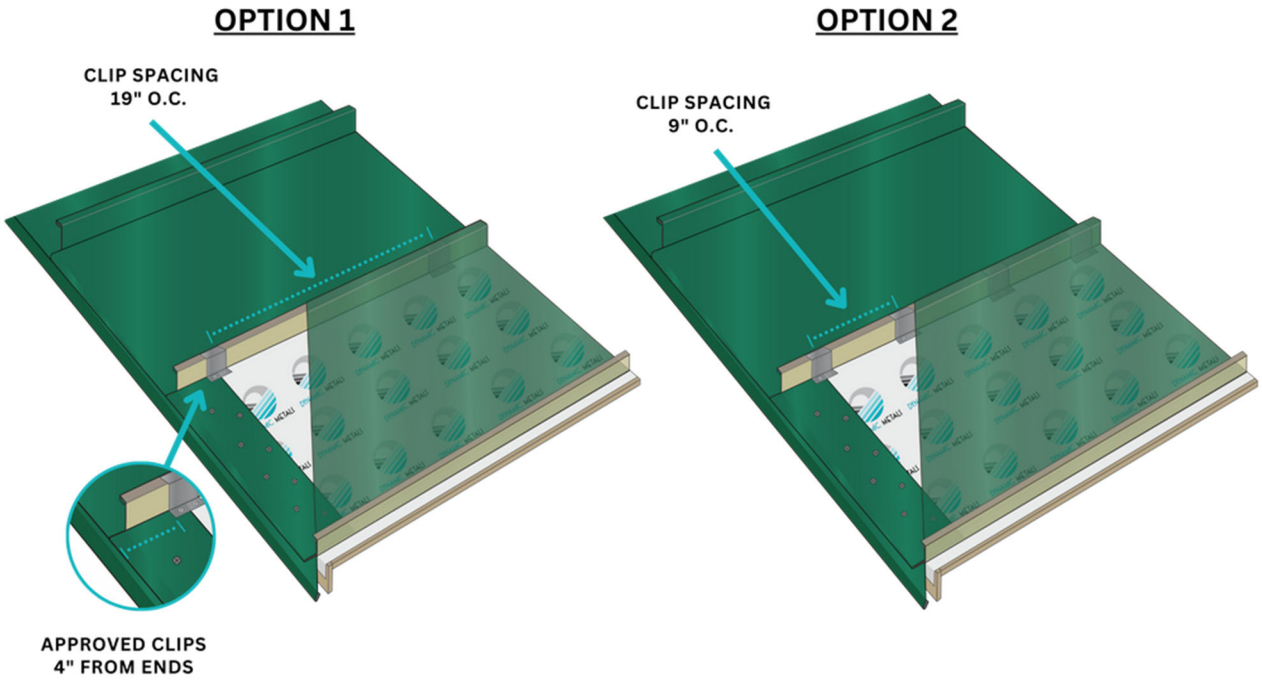

	Option #1 Installation	**Option #2** Installation
Max. Design Pressure	-173.75 psf	-221.5 psf
Clip Anchor Spacing	4" From Ends, 19" Max O.C.	4" From Ends, 9" Max O.C.
Min Panel Fasteners	#10x1" Panclip Fasteners, two (2) per clip	#10x1" Panclip Fasteners, two (2) per clip
Panel Seam	Panels are Seamed to 90°	Panels are Seamed to 90°
Panel Sealant	Not Required[1]	Not Required[1]

Notes:

1) Panel sealant is required for installation in the HVHZ with roof slopes below 2:12.
2) Option #1 and Option #2 may be referred to as "field" and "corner" conditions, respectively.
3) Compare *allowable* pressures required for the project to the maximum allowable design pressure above and select any option which meets or exceeds the pressures required for the project.
4) Installation graphics on this page are provided as a visual representation; specific written text in this product approval & applicable building code shall take precedence.
5) A factor of safety of 2.0 has been applied.

Non-High Velocity Hurricane Zone (Non-HVHZ):
This product *is approved for installation* ***outside*** the HVHZ (Miami-Dade & Broward counties). References to HVHZ sections of the FBC (e.g. Fire Barrier) generally do not apply when the product is installed outside of the HVHZ.

High Velocity Hurricane Zone (HVHZ):
This product *is approved for installation* ***inside*** the HVHZ (Miami-Dade & Broward counties), and other jurisdictions which require HVHZ or NOA approvals. Comply with HVHZ elements of the FBC where required.

Underlayment:
Comply with FBC 1507.1.1 (non-HVHZ) or 1518.2 (HVHZ), and per local codes.

Slope:
Comply with FBC 1507.4.2 (non-HVHZ) or 1515.2 (HVHZ), and per local codes.
OUTSIDE the HVHZ, FBC 1507.4.2 minimum slope is 1/4:12.
INSIDE the HVHZ, FBC 1515.2 minimum slope is 1:12.
This product has passed the requirements of ASTM E2140.

Trim and Flashing Details:
Comply with manufacturer's recommendations and RAS 133.

Re-Roofing:
This panel may be installed over a single layer of existing shingles as permitted by local building code or FBC 1511/1521, provided the existing roof meets the conditions required by the applicable code. Size fasteners to fully penetrate ¼" (min) through substrate.

Fire Barrier:
Comply with FBC 1516.1 and 1516.2 where required.
Where not required by code. Fire classification is not a part of this evaluation.
Where required, refer to a current fire directory listing for fire ratings of this roofing system assembly as well as the location of the fire barrier within the assembly.

Technical Documentation
1) This product has been tested to meet the standards listed below by Intertek Testing (TST-152).
2) Per reports **S7738.23-450-44, S7738.26-450-44, and S7738.37-450-18,** signed and sealed by Tanya Dolby, PE, and by PRI Construction Materials Technologies, per test reports **VLS-004-02-01** and **VLS-005-02-01**
3) Drawing 47604.20-R1, dated 9/2/25, signed and sealed by Scott Wolters, PE.
4) Supplemental Calculations to support drawing 47604.20-R1, signed & sealed by Scott Wolters, PE.
5) Reports used for evaluation are owned by Lara's IP & Research, LLC., and used with prior written permission.

Compliance Statement:
Reviewed per the FAC Product Approval Rule, Chapter 61G20-3.005 (4), this product, as described in this report and drawing 47604.20-R1, meets all of the requirements of sections 1504.3.2 (non-HVHZ) and 1518.9/1523.6.5.2.4 (HVHZ) of the 8th Edition (2023) Florida Building Code.
This product as described has been tested and demonstrated compliance with:
UL580 – Test for Uplift Resistance of Roof Assemblies
UL 1897 – Uplift test for roof covering systems
ASTM E2140 – Static Water Leakage Test criteria only
TAS 125 – Standard Requirements for Metal Roofing Systems
TAS 100 - Wind and Wind-Driven Rain
TAS 110 – Physical Properties of Roofing Components

Panel Labeling:
Products sold in the HVHZ that require labeling shall bear the following or similar label. Other labeling in accordance with FBC 1523.5 shall also be permitted.

DYME METALS

City, State
DM Class 2000 FL #47604.20

Approved for
Miami-Dade County

Design Process:
Compare the maximum allowable loads to the ASD uplift pressures for the project to determine sufficiency and installation requirements. Determine project uplift pressures using ASCE 7-22, FBC R301, project design documents, guidance from local building department, or other design professionals. Engineering analysis may be completed by other licensed engineers for project specific approval by local authorities having jurisdiction.

Exclusions and Limitations:
Design of deck and roof structure (to include attachment of plywood or wood plank) shall be completed by others. Fire classification and shear diaphragm design are outside the scope of this evaluation.

This report is limited to compliance with structural wind load requirements of FBC 1504.3.2, as required by Rule 61G20-3. Neither Wolters Engineering nor the manufacturer shall be responsible for any conclusions, interpretations, or designs made by others based on this evaluation report. This report is limited solely to documenting compliance with Rule 61G20-3 and makes no express or implied warranty regarding performance of this product. Installation shall be subject to the local building code and authority having jurisdiction.

Panel Forming:
Panels may be formed on the jobsite with the following DYME Metals Association, LLC approved machines, under a quality assurance program audited by an approved 3rd. party QA auditor

SSP-10751007, 5VC-0700123, SSQ2U-6470323, SSQ2U-6480323, SSQ-6800617, SSQ-6690517, 5VC-0490718, SSQ-5150216, SSQ-4560615, 5VC-0360516, SSQ-6810617, SSQ2U-4031121, SSQ2U-4041121, SSQU-4051121

If you have any questions or need more information concerning this approval, please contact me.

Scott Wolters
FLPE# 62354
Wolters Engineering, Inc.
(COA# 27194)
15211 97th Road N
West Palm Beach, FL 33412
(561) 225-1982

SCOTT WOLTERS LICENSE No 62354 STATE OF FLORIDA PROFESSIONAL ENGINEER

Digitally signed by Scott Wolters
Date: 2025.09.07 21:53:56 -04'00'

© 2025 Lara IP & Research, LLC.
All test data, engineering reports, technical illustrations, line drawings, and related intellectual property contained within this document are the sole property of Lara IP & Research, LLC. Used with permission under written prior written agreement by DYME Metals Association, LLC. for regulatory submittals, internal reference, and lawful distribution to authorized parties only.
Reproduction, redistribution, or commercial use without express written consent from Lara IP & Research, LLC is strictly prohibited.

ISOMETRIC VIEW

24 ga galv. steel clip

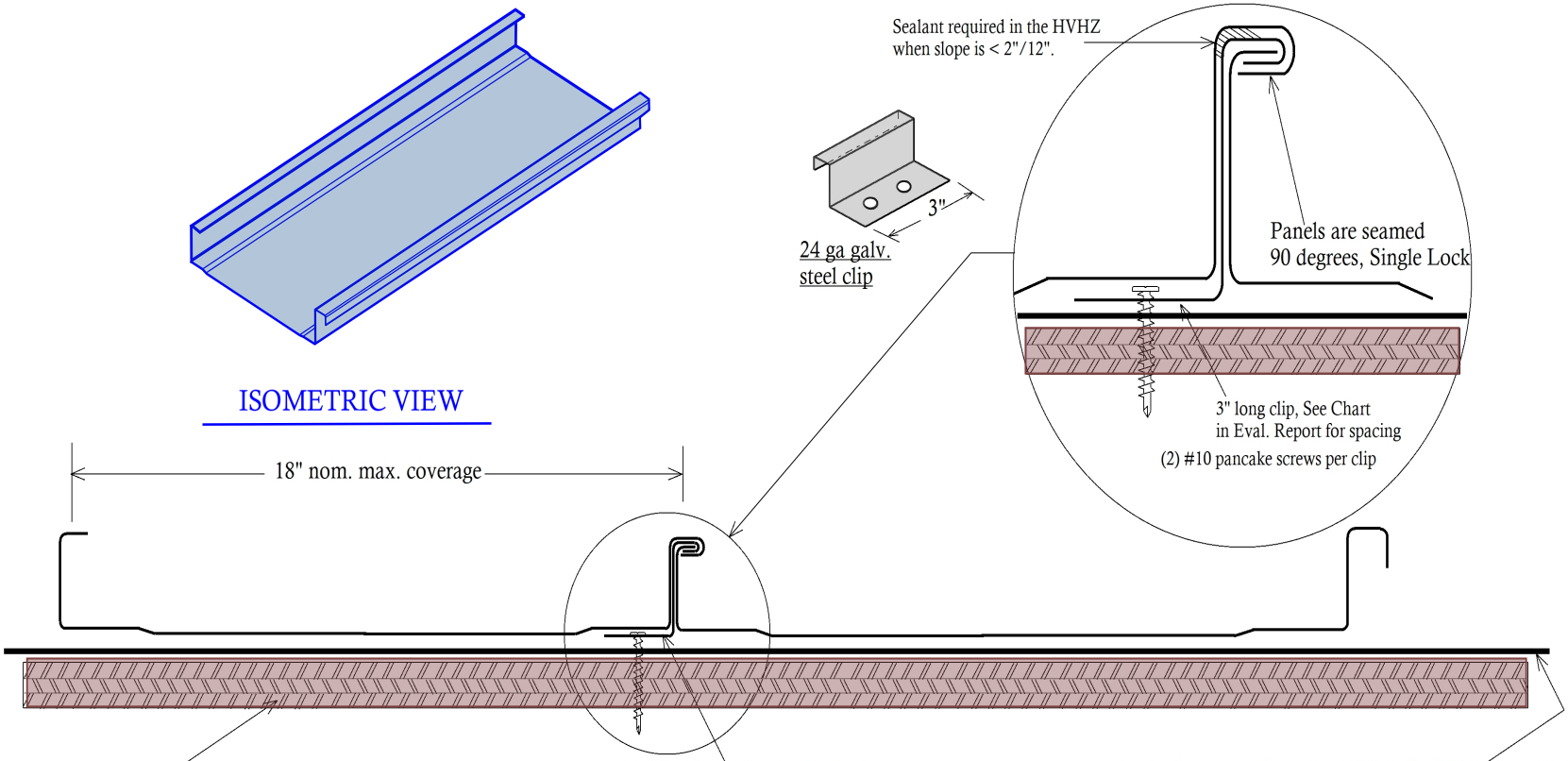

FLPA# 47604.20-R1

DM CLASS 2000 Panel Profile

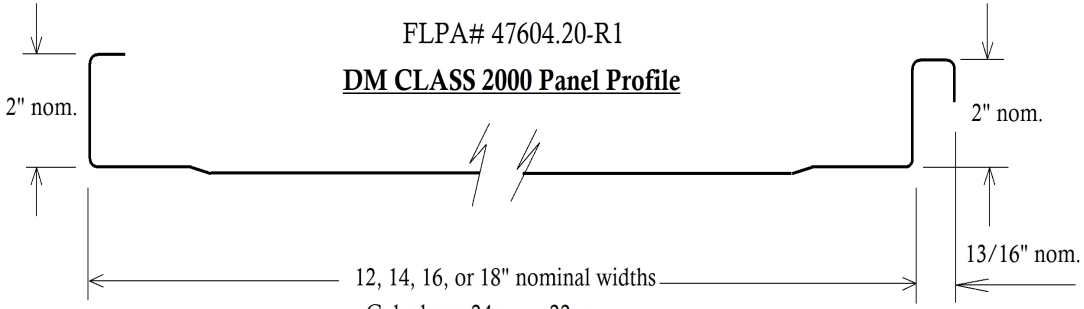

Galvalume 24 ga or 22 ga

MAX. DESIGN PRESSURE 24 ga Galvalume Tested FLPA# 47604.20-R1 APPROVED FOR USE IN HVHZ
Option #1, Clips spaced 4" from ends, 19" o.c. max. = -173.75 psf Option #2, Clips spaced 4" from ends, 9" o.c. max. = -221.5 psf

GENERAL NOTES:

1. Roof slope is limited per the requirements of FBC Section 1507.4.2 or 1515.2. Residential Code 905.10.2
2. Design of substrate is by others and not a part of this approval. Perimeters and woodblocking should comply with (RAS 111 where applicable).
3. All panel system perimeters, penetrations, and transitions to be flashed and sealed per the requirements of DYME Metals' Installation Instructions and (RAS 133 where applicable).

SCOTT WOLTERS
FL PE# 62354

WOLTERS ENGINEERING
(COA# 27194)
15211 97TH ROAD N
WEST PALM BEACH, FL 33412
PH/FAX: (561) 225-1982

SCOTT WOLTERS LICENSE No 62354 STATE OF FLORIDA PROFESSIONAL ENGINEER

SEP 07 2025

DYME METALS Association

DRAWN	RWM
CHECKED	
DATE	9-2-25
SCALE	NTS